SURFACE	~	▽	▽▽	▽▽▽	G ▽▽▽	▽▽▽▽
	✓	25	12.5	6.3	1.6 G	0.8
SIZE (mm)	<10	10~30	30~120	120~315	315~1000	1000~2000
TOLERANCE	±0.1	±0.15	±0.2	±0.25	±0.3	±0.5
(–)(○)(⌭)(⌒)(⊥)(⊕)(◎)	0.05	0.1	0.15	0.2	0.3	0.5

NO MENTION CHAMFERING : C0.2 ~ C0.3

FINISHING 12.5 6.3

SURFACE TREATMENT -

HARDENING (HRC) -

ITEM	QTY	DESCRIPTION	SPECIFICATION	MATERIAL	WEIGHT	REMARK
1	4	SHAFT	ϕ10 X 76	SS400	-	-
2	4	NUT	M6	SUS	-	FW & SW
3	4	NUT	M4	SUS	-	FW & SW

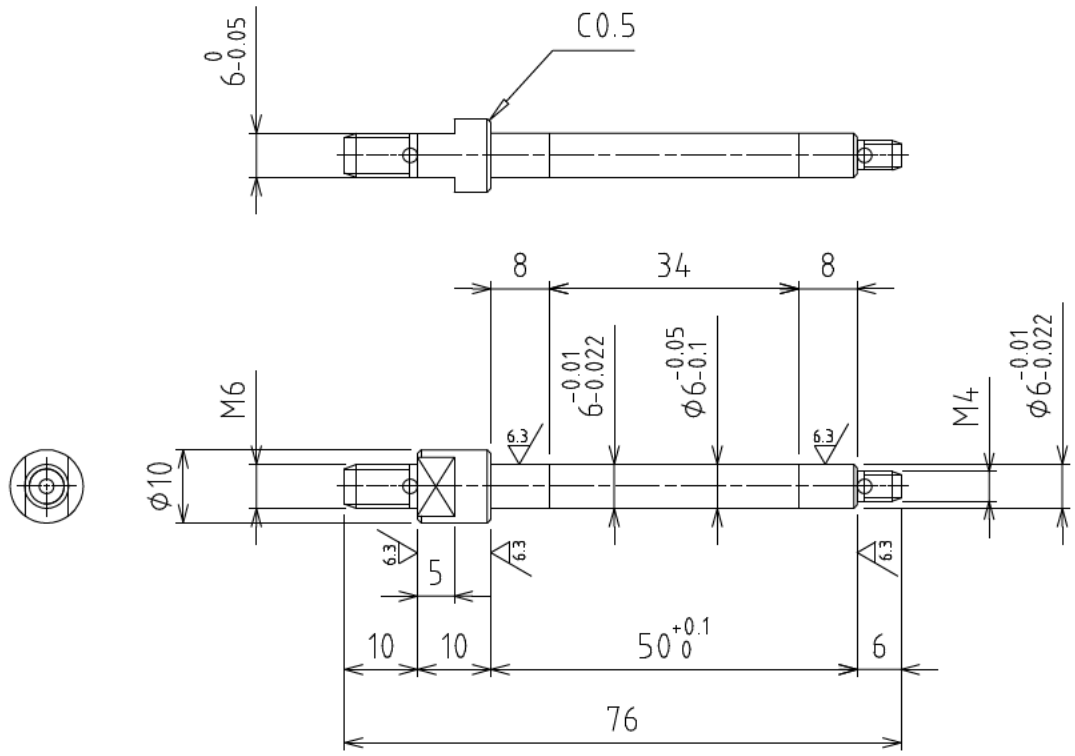

NISHITECH. CO., LTD.

Surface

Scale 1:1 | Position - | Quantity 4 PCS

SS400 -

- -

	Date	Name
Drawn	10/19/2010	user
Checked		
Standard		

Project Name

Messrs.

SHAFT

Drawing No.

101018-A00R1-P08

Page -

Pg

State	Changes	Date	Name	Filename